iRAIL - SCONCE LED System

Lighting Integration for Architectural Railings

VIVA RAILINGS®
LEADERS IN ARCHITECTURAL RAILING SYSTEMS

DESIGN • ENGINEER • FABRICATE • INSTALL

151 W. Vista Ridge Mall Dr. Lewisville, TX 75067 | 972-353-8482 | info@vivarailings.com | vivarailings.com

iRAIL SCONCE LED SYSTEM

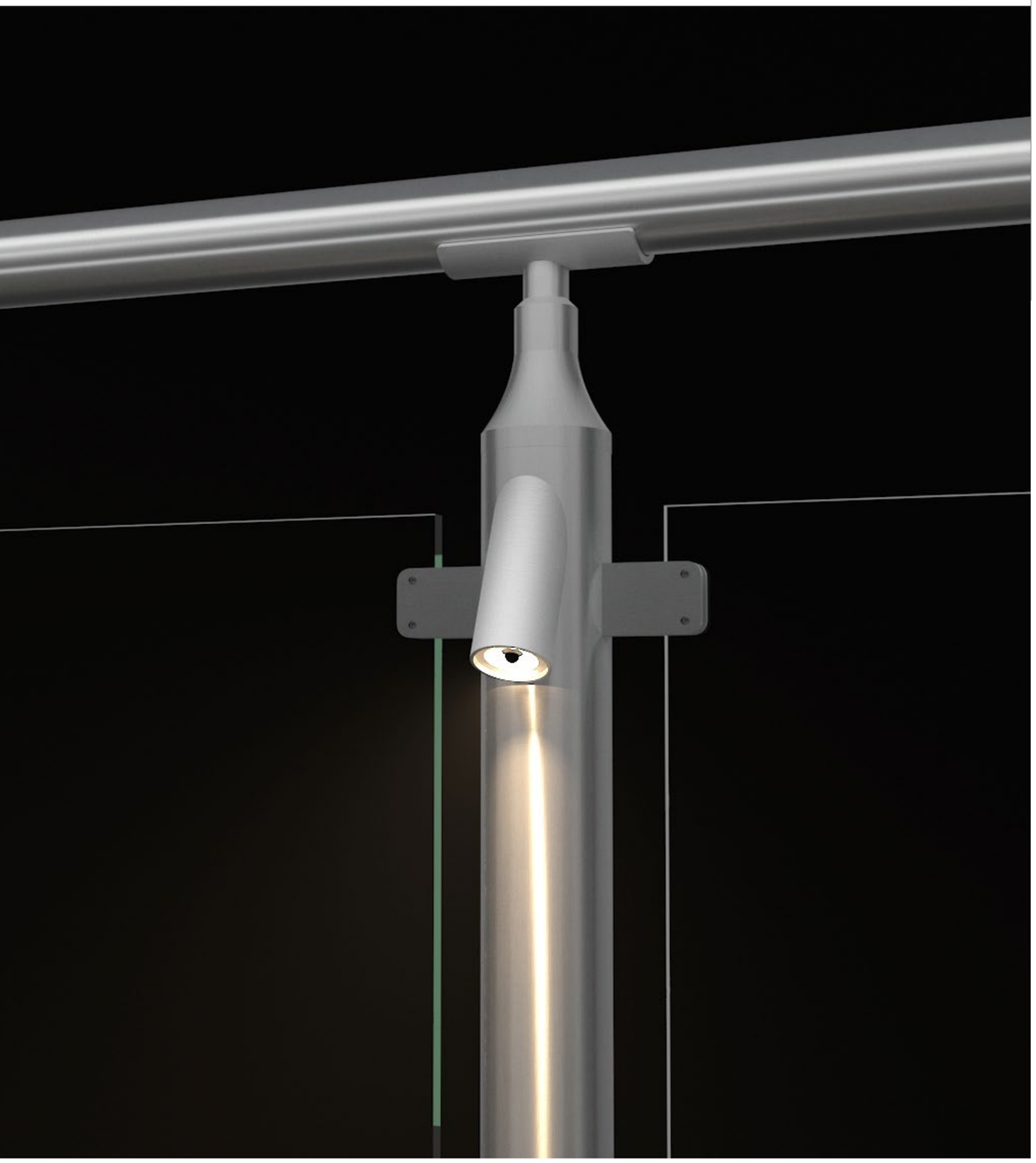

The LED Sconce is a compact and elegantly integrated lighting fixture offered as an accent illumination option within VIVA Railings systems. Designed to provide subtle yet effective lighting, the LED Sconce mounts directly onto the railing post, casting a soft downward glow that enhances both safety and aesthetics without visual clutter.

Key Features:

- Post-mounted LED fixture, seamlessly blending with the overall railing architecture.
- Directional lighting, ideal for pathways, corridors, or stairways where visibility is essential.
- Clean, minimalistic form, aligning with modern architectural themes.
- Compatible with VIVA systems such as WAVE, CIRCA, CUBE and FSR
- ETL certified, ensuring compliance with North American safety standards.
- This sconce provides a beautiful architectural detail while fulfilling a practical role in low-light environments.

151 W. Vista Ridge Mall Dr. Lewisville, TX 75067 972-353-8482 info@vivarailings.com vivarailings.com

DETAILS

	TOP RAIL / HAND RAIL	FINISH	SPEC
iRAIL SCONCE	Ø2” Post Stainless steel (304 or 316) 2”X2” Post Stainless Steel (304 or 316) Ø2” Post Steel 2”X2” Post Steel	#6 Satin Powder Coat	Color: 3000K Warm White or 4000K Cool White. Output: 3W/light - 212lm Sym. Beam Angle: 120° Orientation: 25° Power: Input 120 - 277 V AC, Output 24 V DC Lens: Frosted CRI: >80 Rating: IP67

Intertek

All LED SCONCE products are ETL certified; ETL mark is proof of product compliance to North American safety standard.

OVERVIEW

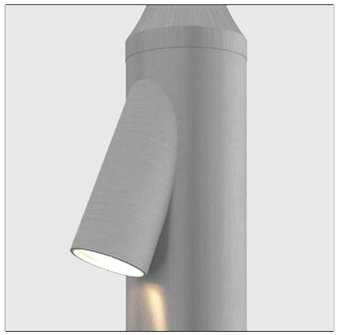

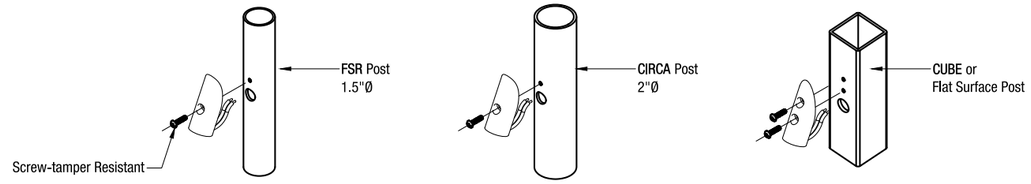

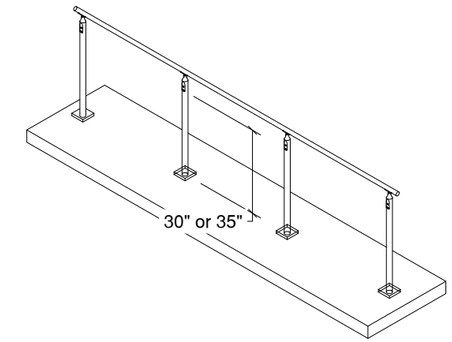

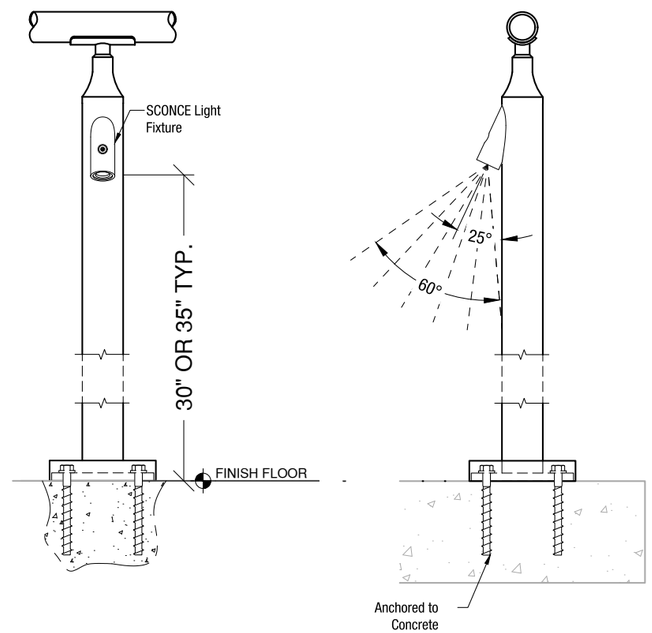

VIVA RAILINGS IS NOT RESPONSIBLE FOR THE STRUCTURAL INTEGRITY OF ANY BUILDING SYSTEMS OR OTHER MATERIALS NOT FURNISHED BY VIVA RAILINGS. VIVA RAILINGS HAS NO WAY OF KNOWING AND SPECIFICALLY DISCLAIMS WHETHER OR NOT THE BUILDING SYSTEMS TO WHICH VIVA RAILINGS' PRODUCTS ARE TO BE ATTACHED ARE STRUCTURALLY SOUND OR DESIGNED TO PROPERLY SUPPORT VIVA RAILINGS'S MATERIALS. ANY SUCH DESIGN RESPONSIBILITY BELONGS TO OTHERS FOR WHOM VIVA RAILINGS IS NOT RESPONSIBLE. THESE DRAWINGS ARE INTENDED FOR THE SOLE USE OF VIVA RAILINGS' CUSTOMER AND THEIR AGENTS FOR THE INSTALLATION OF PRODUCTS FURNISHED BY VIVA RAILINGS. VIVA RAILINGS REMAINS THE SOLE OWNER OF ALL DESIGNS AND INTELLECTUAL PROPERTY CONTAINED WITHIN. REPRODUCTION AND USE OF THESE DESIGNS FOR ANY OTHER PURPOSE IS FORBIDDEN. SCALES ARE PROVIDED FOR REFERENCE ONLY. FOR PRODUCT INFORMATION AND TECHNICAL SUPPORT, PLEASE CONTACT VIVA RAILINGS.

151 W. Vista Ridge Mall Dr. Lewisville, TX 75067 972-353-8482 info@vivarailings.com vivarailings.com

DISPERSION DIAGRAM

4' - 0" Spacing

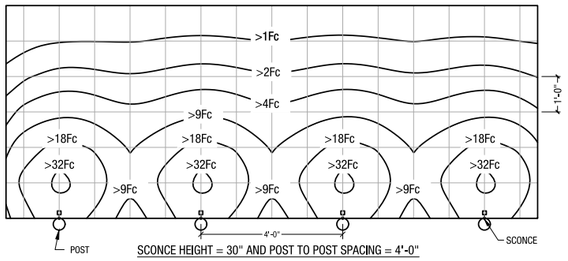

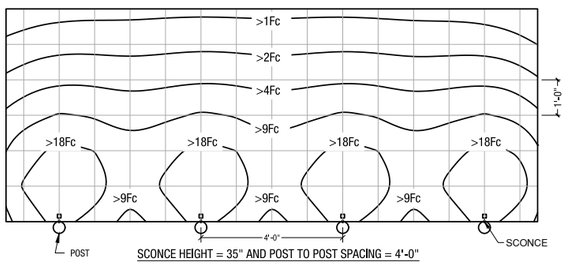

5' - 0" Spacing

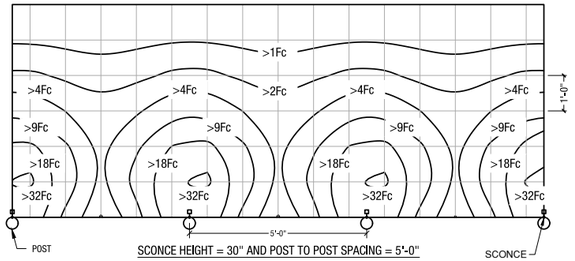

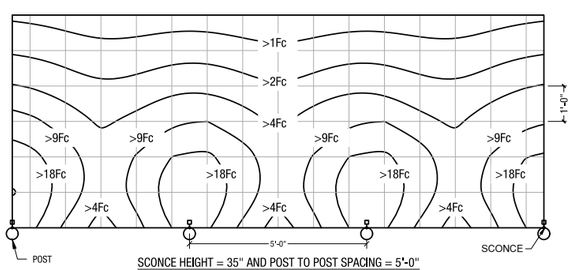

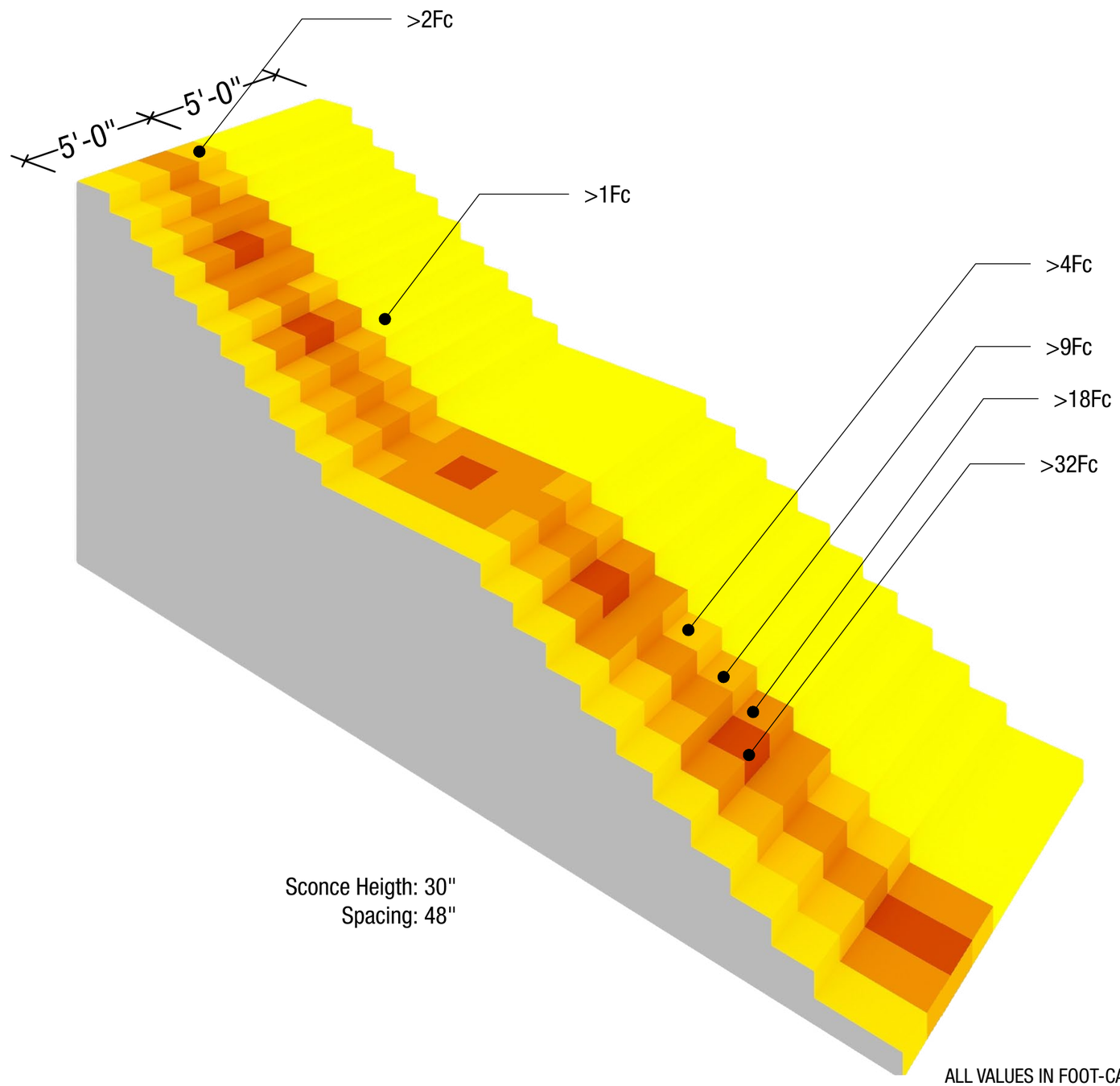

Legend	
Color	Intensity (ft/cl)
	>1ft/cl
	>2ft/cl
	>4ft/cl
	>9ft/cl
	>18ft/cl
	>32ft/cl
	>45ft/cl
	>75ft/cl

Sconce Heigth: 30"
Spacing: 48"

ALL VALUES IN FOOT-CANDLE (FC)

VIVA RAILINGS IS NOT RESPONSIBLE FOR THE STRUCTURAL INTEGRITY OF ANY BUILDING SYSTEMS OR OTHER MATERIALS NOT FURNISHED BY VIVA RAILINGS. VIVA RAILINGS HAS NO WAY OF KNOWING AND SPECIFICALLY DISCLAIMS WHETHER OR NOT THE BUILDING SYSTEMS TO WHICH VIVA RAILINGS' PRODUCTS ARE TO BE ATTACHED ARE STRUCTURALLY SOUND OR DESIGNED TO PROPERLY SUPPORT VIVA RAILINGS'S MATERIALS. ANY SUCH DESIGN RESPONSIBILITY BELONGS TO OTHERS FOR WHOM VIVA RAILINGS IS NOT RESPONSIBLE. THESE DRAWINGS ARE INTENDED FOR THE SOLE USE OF VIVA RAILINGS' CUSTOMER AND THEIR AGENTS FOR THE INSTALLATION OF PRODUCTS FURNISHED BY VIVA RAILINGS. VIVA RAILINGS REMAINS THE SOLE OWNER OF ALL DESIGNS AND INTELLECTUAL PROPERTY CONTAINED WITHIN. REPRODUCTION AND USE OF THESE DESIGNS FOR ANY OTHER PURPOSE IS FORBIDDEN. SCALES ARE PROVIDED FOR REFERENCE ONLY. FOR PRODUCT INFORMATION AND TECHNICAL SUPPORT, PLEASE CONTACT VIVA RAILINGS.

151 W. Vista Ridge Mall Dr. Lewisville, TX 75067 | 972-353-8482 | info@vivarailings.com | vivarailings.com

LIGHTED POST

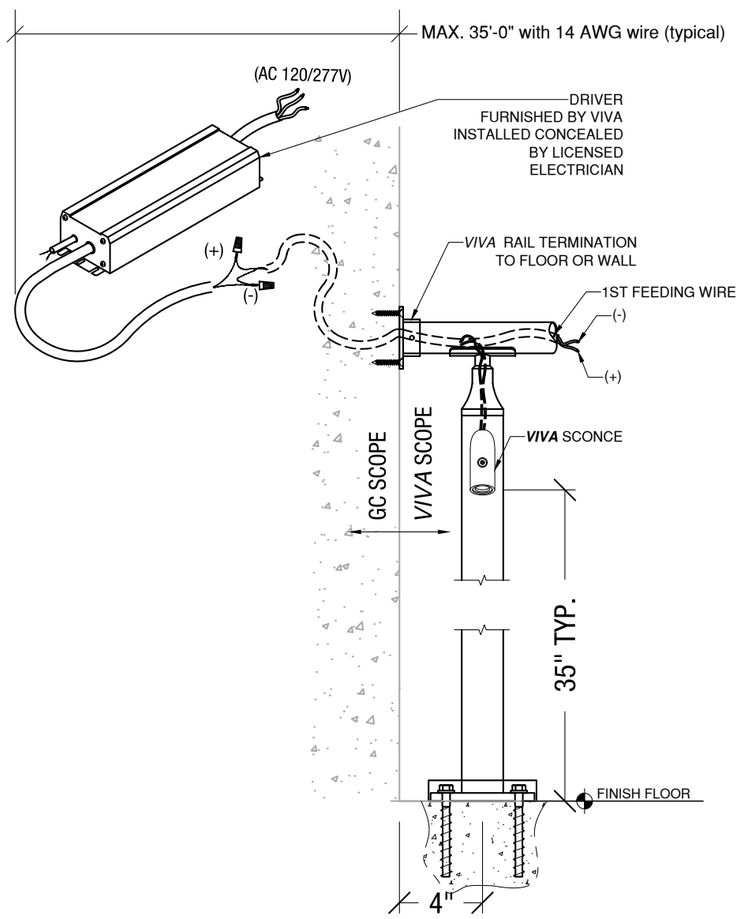

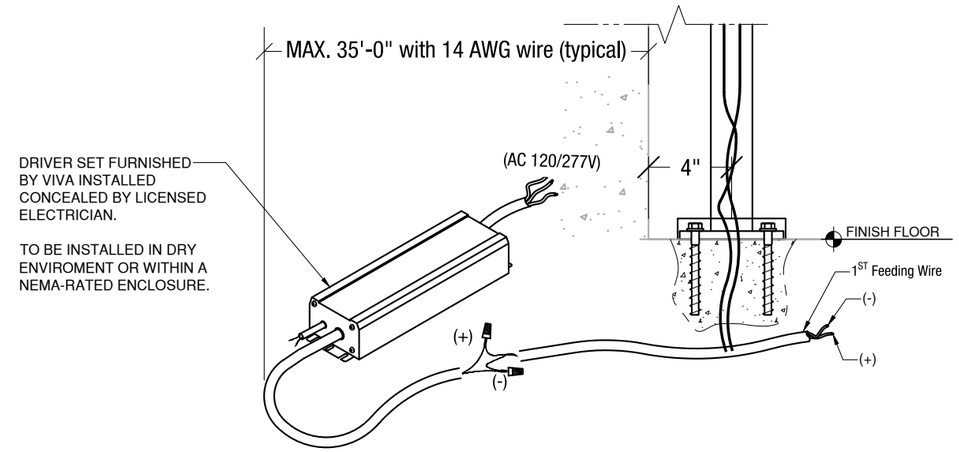

Feeding trough post

iRail SCONCE Order Code:

IR-SCO- C2 -304-30K

- Light color: Warm white 3000k 30K
  - Cool white 4000k 40K
- Alloy Composition: Stainless Steel 304 304
  - Stainless Steel 316 316
  - Stainless Steel 201 201
- Available Applications: Ø2" Tube C2
  - Tubular Flat Surfaces SQ
  - Ø1.5" Tube C1
- iRAIL Sconce SCO

VIVA RAILINGS IS NOT RESPONSIBLE FOR THE STRUCTURAL INTEGRITY OF ANY BUILDING SYSTEMS OR OTHER MATERIALS NOT FURNISHED BY VIVA RAILINGS. VIVA RAILINGS HAS NO WAY OF KNOWING AND SPECIFICALLY DISCLAIMS WHETHER OR NOT THE BUILDING SYSTEMS TO WHICH VIVA RAILINGS' PRODUCTS ARE TO BE ATTACHED ARE STRUCTURALLY SOUND OR DESIGNED TO PROPERLY SUPPORT VIVA RAILINGS'S MATERIALS. ANY SUCH DESIGN RESPONSIBILITY BELONGS TO OTHERS FOR WHOM VIVA RAILINGS IS NOT RESPONSIBLE. THESE DRAWINGS ARE INTENDED FOR THE SOLE USE OF VIVA RAILINGS' CUSTOMER AND THEIR AGENTS FOR THE INSTALLATION OF PRODUCTS FURNISHED BY VIVA RAILINGS. VIVA RAILINGS REMAINS THE SOLE OWNER OF ALL DESIGNS AND INTELLECTUAL PROPERTY CONTAINED WITHIN. REPRODUCTION AND USE OF THESE DESIGNS FOR ANY OTHER PURPOSE IS FORBIDDEN. SCALES ARE PROVIDED FOR REFERENCE ONLY. FOR PRODUCT INFORMATION AND TECHNICAL SUPPORT, PLEASE CONTACT VIVA RAILINGS.

151 W. Vista Ridge Mall Dr. Lewisville, TX 75067 972-353-8482 info@vivarailings.com vivarailings.com

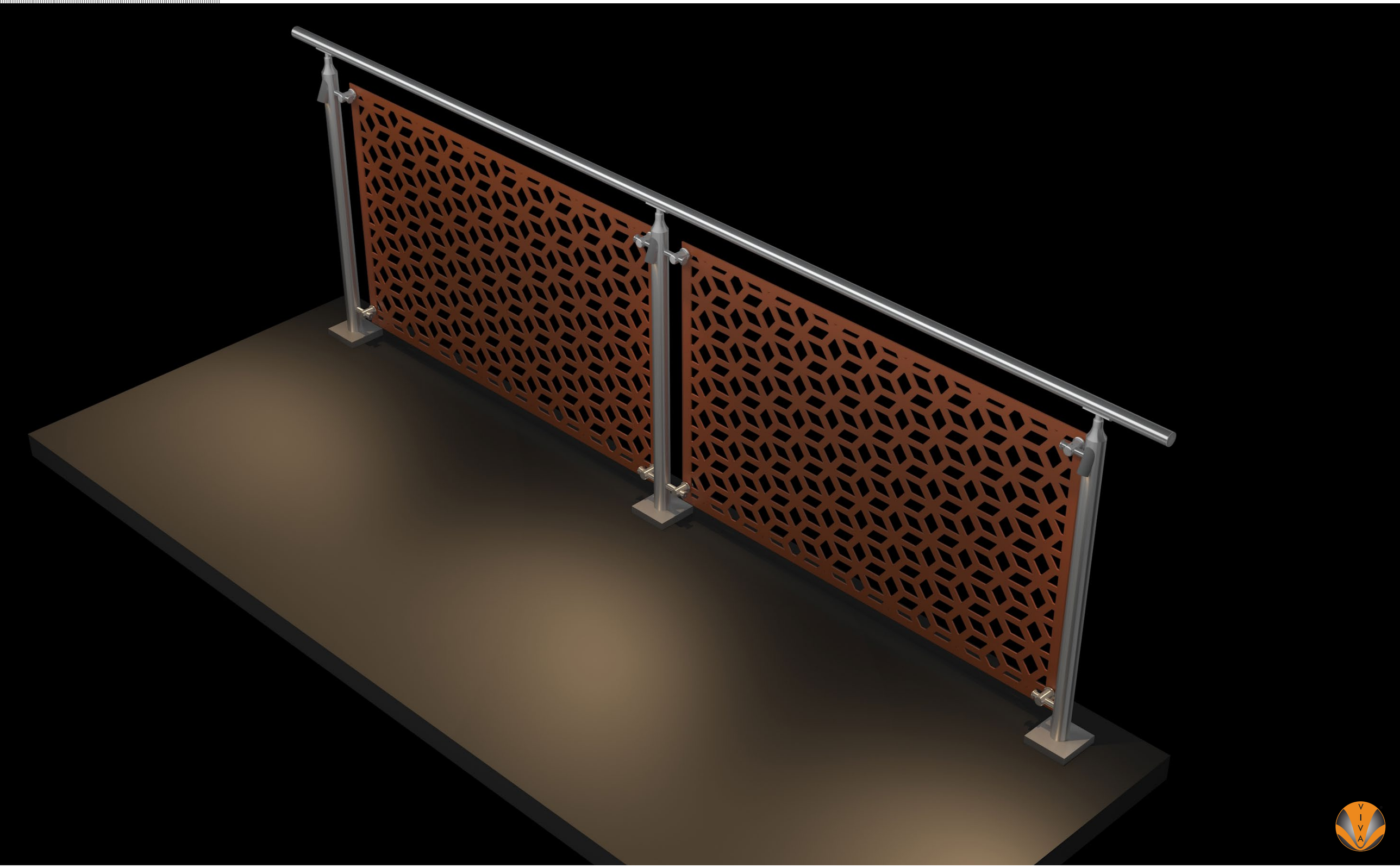

iRAIL LIGHTED RAILING SYSTEM
GRANITE PARK VI

GRANITE PARK VI - PLANO, TX

General Contractor: Austin Comm.

Architect: BOKA Powell

151 W. Vista Ridge Mall Dr. Lewisville, TX 75067 972-353-8482 info@vivarailings.com vivarailings.com

iRAIL LIGHTED RAILING SYSTEM
MCGRATH AMPHITHEATRE VENUE

MCGRATH AMPHITHEATURE - CEDAR RAPIDS, IA

General Contractor: Justice Electric

iRAIL LIGHTED RAILING SYSTEM
CHOCTAW CASINO & RESORT

CHOCTAW CASINO & RESORT - DURANT, OK

General Contractor: TEPCO Glass

Architect: JCJ Architecture

151 W. Vista Ridge Mall Dr. Lewisville, TX 75067 | 972-353-8482 | info@vivarailings.com | vivarailings.com

iRAIL LIGHTED RAILING SYSTEM
ANDRETTI / GRANDSCAPE

ANDRETTI / GRANDSCAPE - THE COLONY, TX

General Contractor: VCC Construction Corp.

Architect: Merriman - MAA Architects

VIVA RAILINGS®

LEADERS IN ARCHITECTURAL RAILING SYSTEMS

DESIGN ✦ ENGINEER ✦ FABRICATE ✦ INSTALL

151 W. Vista Ridge Mall Dr. Lewisville, TX 75067

(Dallas/Fort Worth Metroplex)

PH: 972.353.8482 | info@vivarailings.com

vivarailings.com

Inc. Magazine 500 | 5000
VIVA RAILINGS, LLC.
Among The Fastest Growing
US Companies
Eight Years in a Row
2012-2019

Inc. Magazine 500 | 5000
VIVA RAILINGS, LLC.
Among The Fastest Growing
Texas Companies
#211

ICC-ES 4405 Certified
SHOE™
Structural Glass Railing System

LEED
Material & Resources Credits 4.1 and 4.2

The American Institute of Architects

The California Contractors State License
Board Certified