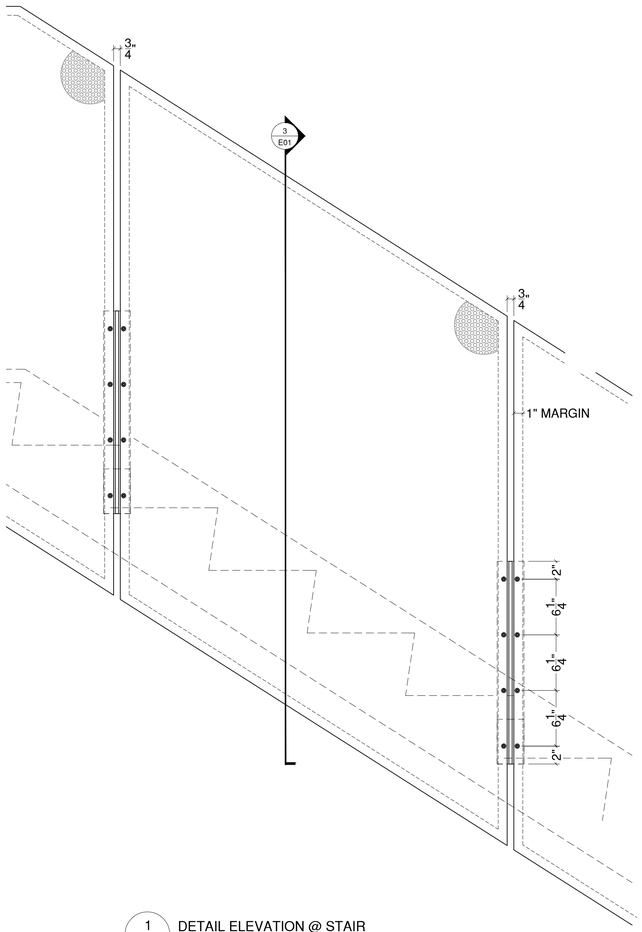

1 E01 DETAIL ELEVATION @ STAIR
SCALE: 1-1/2" = 1'-0"
REF:
VREF:

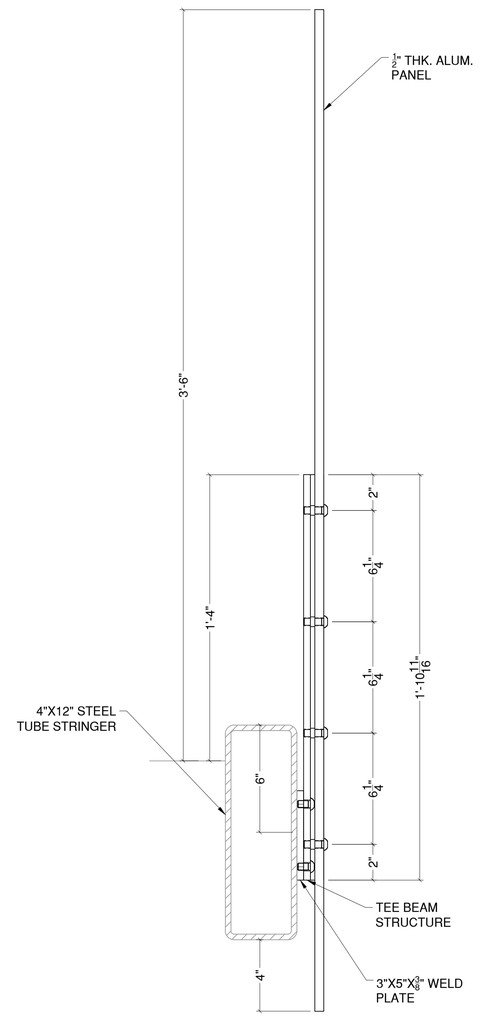

3 E01 DETAIL SECTION @ STAIR
SCALE: 3" = 1'-0"
REF:
VREF:

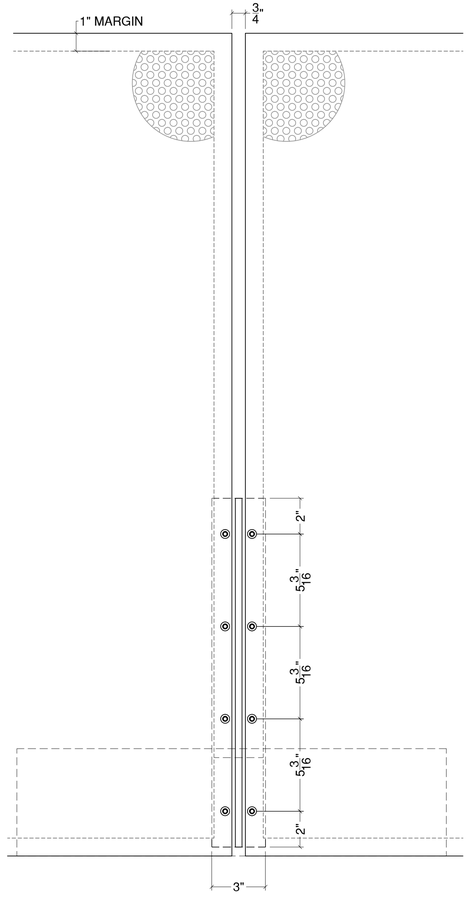

4 E01 DETAIL ELEVATION @ LANDING
SCALE: 3" = 1'-0"
REF:
VREF:

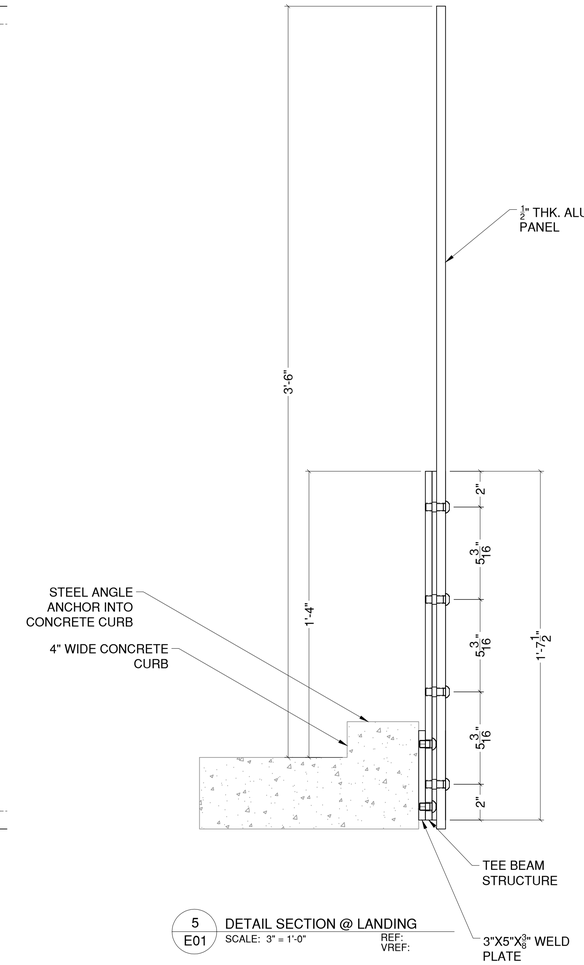

5 E01 DETAIL SECTION @ LANDING
SCALE: 3" = 1'-0"
REF:
VREF:

VIVA RAILINGS, LLC
1454 HALSEY WAY
CARROLLTON, TX 75007
P: 972-353-8482
F: 972-353-0013
e: info@vivarailings.com
www.vivarailings.com

VIVA RAILINGS IS NOT RESPONSIBLE FOR THE STRUCTURAL INTEGRITY OF ANY STRUCTURAL BUILDING SYSTEMS NOT FURNISHED BY VIVA RAILINGS. THESE DRAWINGS ARE INTENDED FOR THE SOLE USE OF VIVA RAILINGS CUSTOMER AND THEIR AGENTS FOR THE INSTALLATION OF PRODUCTS FURNISHED BY VIVA RAILINGS. VIVA RAILINGS REMAINS THE SOLE OWNER OF ALL DESIGNS CONTAINED WITHIN. REPRODUCTION AND USE OF THESE DESIGNS FOR ANY OTHER PURPOSE IS FORBIDDEN. SCALE IS ARE PROVIDED FOR REFERENCE ONLY. FOR PRODUCT INFORMATION AND TECHNICAL SUPPORT, PLEASE CONTACT VIVA RAILINGS.

REV.	DATE:	MADEBY:	EXTERNAL REVISION:	REV.	DATE:	MADEBY:	INTERNAL REVISION:
-	--/--/--	---	-	-	--/--/--	---	-
-	--/--/--	---	-	-	--/--/--	---	-
-	--/--/--	---	-	-	--/--/--	---	-
-	--/--/--	---	-	-	--/--/--	---	-
-	--/--/--	---	-	-	--/--/--	---	-
-	--/--/--	---	-	-	--/--/--	---	-

PROJECT: -
LOCATION: -
CLIENT NAME: -
DESCRIPTION: -

DATE DRAWN: --/--/16

DRAWN BY: ---
CHCK'D BY: ---

PROJECT NUMBER: 16-000

PHASE NO: 1

SHEET NUMBER: E01 OF E--

C:\USERS\DDANG\DROPBOX (DESIGN TEAM)\D.DANG - PERSONAL - 3/10/2017